Electrolux PROFESSIONAL

Flexy Compact Bain-marie, air ventilated, one well (3GN) with wheels H=750mm, overshelf with LED lights

ITEM #

MODEL #

NAME #

SIS #

AIA #

322055 (F03H3KW02S)

Bain-marie on cupboard, air ventilated, one well (3 GN container capacity) with wheels, overshelf with LED lights and two stainless steel tray sliders, H=750mm (Nordic)

Short Form Specification

Item No.

Compact design, ideal for space saving environments. AISI 304 Foldable tray sliders on long sides. Unit mounted on 125 mm wheels 2 swivel and 2 with brakes. Soft closing doors on operator side. Underneath ambient cupboard with doors. A type AISI 304 overshelf equipped with LED lights designed for extra increased visibility on the surface for charming food display. Sleek, minimalist glass structure, food and dust does not get trapped and easy to clean. Curved glass. Sturdy body construction with laminated panelings on 4 sides. Designed to serve the food in gastronorm containers with a maximum height of 150mm. Electronic overheating protection. Digital control with temperature display with precise adjustment (0,1°C). Fully compliant HACCP digital controls include visible alarms. A constant flow of hot air circulating through the containers guarantees the correct food temperatures. Temperature uniformity and 90% faster warm up time are guaranteed thanks to heavy duty armored heating elements and powerful radial booster fans. The system operates without water and ensures 35% energy efficiency when compared to standard bain-marie heating. Since the water is not needed to heat the well, the system guarantees easy of use and maintenance and there is no calcification of the resistances. No water consumption means less operating costs. Wells in 304 AISI stainless steel with rounded corners to facilitate cleaning operations and also equipped with a drain hole. 19mm thick glass wool isolated with galvanize sheet guarantees excellent well insulation to reduce energy dispersion. Food introduced at the correct temperature maintains its core temperature according to Afnor Standards.

APPROVAL:

Main Features

- Electronic overheating protection.
- Designed to serve the food in gastronorm containers.
- Precise temperature control and setting at 0,1°C .
- As standard the product comes with digitally controlled thermostat which is in line of HACCP norms and provides visual alarm as a warning of the increasing or decreasing temperatures.
- It is possible to transform one of the GNs to soup dispenser with the available accessory.
- Suitable for GN 1/1 containers with a maximum height of 150 mm.
- Available drop-in dimensions: 1, 2, 3, 4, 5, 6 GN.
- A constant flow of hot air circulating through the containers guarantees the correct food temperatures. Temperature uniformity and fast warm up time are guaranteed thanks to heavy duty armored heating elements and powerful radial booster fans. Cylindrical stainless steel air diffusors provides a constant air circulation.
- Since the water is not needed to heat the well, the system guarantees easy of use and maintenance: there is no calcification of the resistances.
- No need extra connections for water, less work during installation/maintenance.
- Perfect compact design makes it ideal for space saving environments.
- CB and CE certifed by a third party notified body.
- Soft closing doors on operator side.
- Underneath ambient cupboard with doors ideal for extra storage.
- Available options with online configurator: colors, tray sliders, overshelves, feet/wheels with desired diameter, height 750mm for kids.
- Overshelf equipped with LED lights.
- Optional plinth can be installed to cover the feet or the wheels.
- AISI 304 Tray slider in flush mounted stainless steel is installed on long sides and they can also be folded down to facilitate passage of the units through doorways.
- Ideal for servery lines without an operator.
- Unit mounted on 125 mm wheels 2 swivel and 2 with brakes.
- Stylish A type overshelf designed for extra increased visibility on the surface for charming food display.
- Curved glass.
- Food introduced at the correct temperature maintains its core temperature according to Afnor Standards.
- Available dimensions: 2, 3, 4 GN.
- Thanks to the sleek, minimalist glass structure, food and dust does not get trapped and the cleaning is made easier.

Construction

- Heating elements connected to the well bottom include safety thermostat.
- IPx4 water protection.
- Electronic control with temperature display.
- Overshelf in complete AISI 304.
- Top in AISI 304.
- Sturdy construction with laminated panelings on 4 sides.
- Well in 304 AISI stainless steel with rounded corners to facilitate cleaning operations. The well is also equipped with a drain hole.

Sustainability

- 19mm thick rock wool isolated with galvanize sheet guarantees excellent well insulation to reduce energy dispersion.
- 90% fast preheating phase and no need for water (as traditional bain marie), reduces energy and no water consumption.
- The system operates without water and ensures energy efficiency when compared to standard bain-marie heating.
- No water consumption means less operating costs.

The company reserves the right to make modifications to the products without prior notice. All information correct at time of printing.

Electrolux PROFESSIONAL

Flexy Compact
Bain-marie, air ventilated, one well (3GN) with wheels H=750mm, overshelf with LED lights

Front

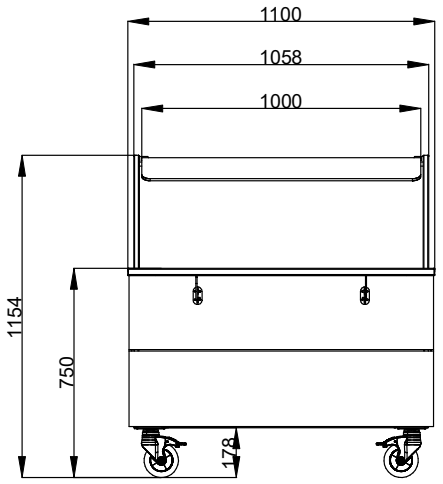

Side

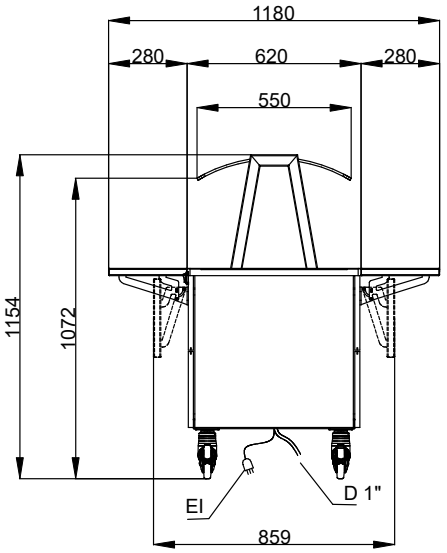

D = Drain
EI = Electrical inlet (power)

Top

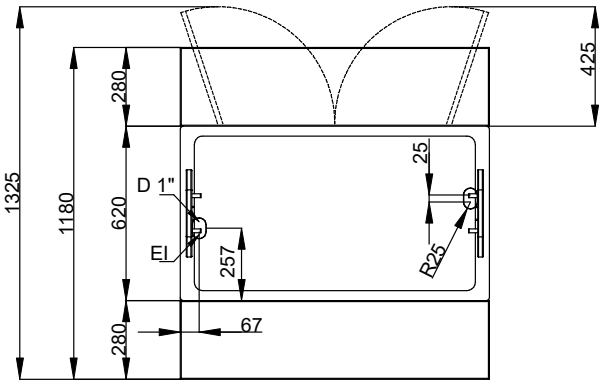

Electric

Supply voltage:	
322055 (F03H3KW02S)	220-240 V/1N ph/50/60 Hz
Electrical power max.:	1.08 kW

Key Information:

N° of doors:	1
External dimensions, Width:	1100 mm
External dimensions, Depth:	1180 mm
External dimensions, Height:	1154 mm
Net weight:	113.5 kg
Shipping height:	1184 mm
Shipping width:	899 mm
Shipping depth:	1140 mm
Shipping volume:	1.21 m³
Set temperature:	+75 / +85 °C

Sustainability

Noise level:	59 dBA

The company reserves the right to make modifications to the products without prior notice. All information correct at time of printing.

2024.10.08